3100 Dundee Road, Suite707, Northbrook, IL 60062
1-866-527-4666 I Fax: 847-564-2095
www.hoto-instruments.com I E-mail: info@hoto-instruments.com
ISO 9001 Certified and ISO/IEC 17025 Accredited

Model: HSS

Surface Speed Encoder

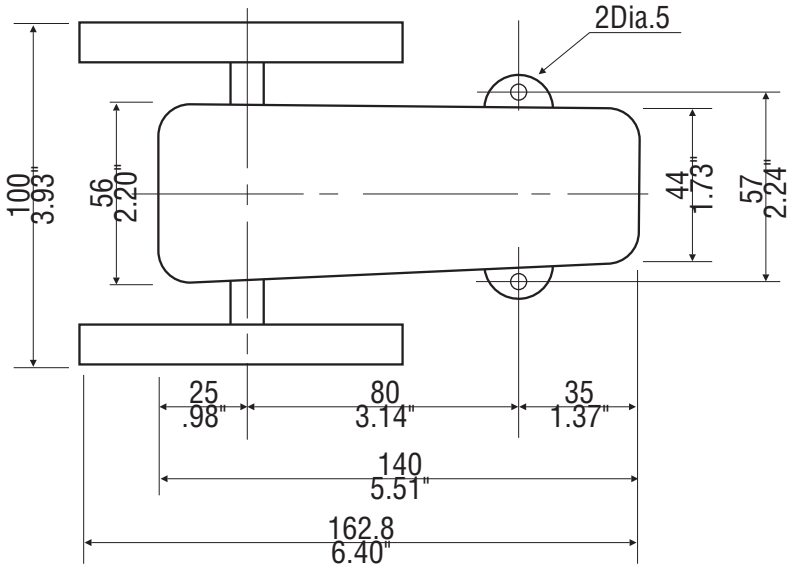

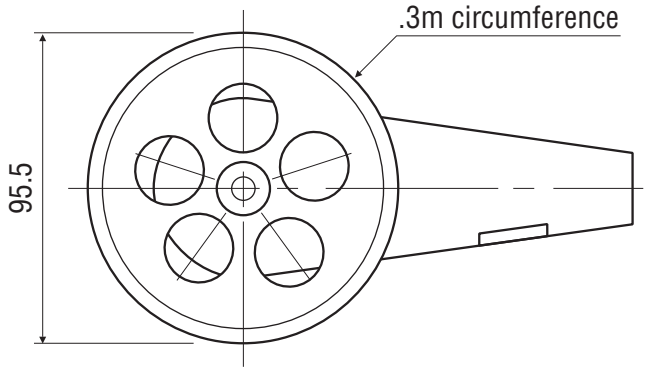
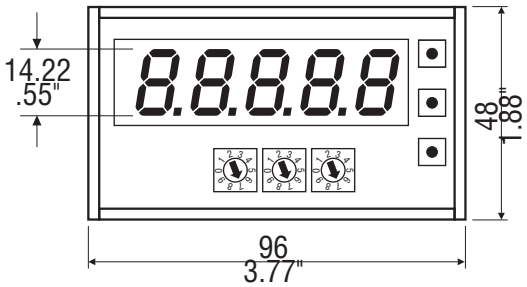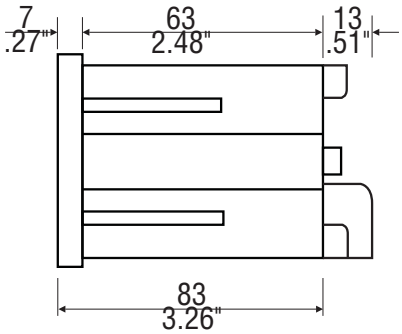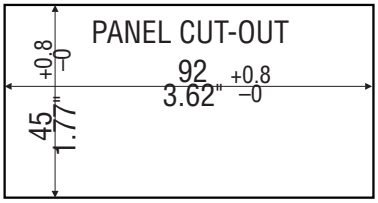
Digital Indicator